THE MAGNETOSPHERIC BOUNDARY LAYER : A STOPPER REGION FOR A GUSTY SOLAR WIND

J. Lemaire

Institut d'Aéronomie Spatiale, 3 Avenue Circulaire,
B - 1180 Brussels, Belgium.

Abstract. Considering that the solar wind plasma density and its momentum density are inhomogeneous over characteristic distances smaller than the magnetopause diameter, filamentary irregularities or clouds of solar wind particles can dent the magnetopause surface and eventually penetrate impulsively into the magnetosphere. Gusty penetration of solar wind plasma irregularities depends on the excess of momentum density and on the orientation of the diamagnetic currents (carried by the plasma inhomogeneities) with respect to the Chapman-Ferraro currents at the magnetopause. The relatively thick Plasma Boundary Layer PBL observed in the frontside magnetopause region can be considered as a stopper region where most of the irregularities lose their excess kinetic energy by Joule dissipation of depolarization Birkeland currents flowing in and out of the polar cusp ionosphere. Expansion of the volume confining the engulfed magnetosheath-like plasma drives field aligned motion of the plasma front surfaces down into the lower cusp regions. The density inside the plasma elements decreases as a result of the expansion along interconnected magnetic field lines. The thickness and the density distribution in the Boundary Layer depends on the irregularity spectrum of the solar wind plasma interacting with the geomagnetic field at any instant of time.

Introduction

There are many examples of relatively thick Boundary Layers formed just below or above surfaces separating two different kinds of fluids. A rather illustrative example is the Boundary Layer observed at sea surface where bubbles of air are mixed up with water when a gusty wind blows over the sea (S.A. Thorpe 1978, personal communication).

The concentration of air engulfed in this Boundary Layer decreases with depth. The thickness of this transition layer is highly variable and depends on the characteristics of the wind streaming above the surface. Different theories for the formation of this boundary layer have been advocated. Numerous experimental difficulties hinder the determination of the detailed structure for this Boundary Layer.

This reminds us of the difficulties encountered by magnetospheric physicists because of the coarse time resolution in experimental data in the study of the Boundary Layer immediately earthward of the Magnetopause surface. The theories advanced for the Magnetospheric Boundary Layer, also, are in a controversial phase of development.

Although there are some analogies between the Magnetospheric Boundary Layer described in the following section and the hydrological Boundary Layer, any closer comparison cannot be sought. The analogies should be considered only as illustrations, since the physics involved in both cases is different.

Observations

Since detailed observations of the magnetospheric Boundary Layer are given in the paper by Eastman and Hones in this issue, it will suffice to list them briefly for later reference. More details can be found in Freeman et al. (1968), Akasofu et al. (1973), Rosenbauer et al. (1975), Paschmann et al. (1976, 1979), Eastman et al. (1976), Crooker (1977), Eastman and Hones (1978), Haerendel et al. (1978).

1) Magnetosheath-like plasma is present earthward of the magnetopause. The region where this relatively cold solar wind plasma has been observed is known as the Magnetospheric Boundary Layer. Other terms are also found in the literature referring to different parts of the magnetopause region where the observations were made. We will use like Eastman and Hones (1979), PBL as a generic term for Plasma Boundary Layer. It includes the High Latitude Boundary Layer (HLBL) and the Low Latitude Boundary Layer (LLBL) as introduced by Paschmann et al. (1976) and Haerendel et al. (1978).

2) The low latitude portion of the PBL (i.e. the LLBL) is located in a region of generally closed geomagnetic field lines.

3) The plasma density decreases progressively with depth earthward of the magnetopause.

4) The average energy of the ions in the LLBL increases progressively with depth from magnetosheath values to magnetospheric values.

5) The electron energy spectra in the LLBL are often virtually indistinguishable from those of the adjacent magnetosheath electrons.

6) The plasma flow velocity often has a significant component perpendicular to the local geomagnetic field direction. The plasma flows generally away from the subsolar point.

7) The value of the bulk flow velocity progressively decreases with depth.

8) Magnetosheath-level fluctuations in the magnetic field intensity and direction are usually present in the Boundary Layer. The standard deviation of these low frequency field fluctuations decay in the inner portions of the LLBL.

9) The thickness of the Boundary Layer is rather variable and ranges between ~ 100 km to several thousands of kilometers. There is a tendency for having thicker Boundary Layers at larger distances from the subsolar point. No correlation between the thickness or presence of a Boundary Layer and the Interplanetary Magnetic Field direction has so far been clearly identified.

10) Sometimes significant density enhancements are observed in the Boundary Layer with at least partly detached magnetosheath-like plasma regions. Fully detached intrusions of magnetosheath-like plasma have been observed by the ISEE satellites near the noon meridian at ~ 25° GSM Latitude.

It is this set of observations that theories are supposed to account for. An example from each of two general classes of theoretical models (steady state & non-steady state) are briefly reviewed in the next section.

Steady state model

Eastman et al (1976) suggested that the magnetospheric Boundary Layer observed by IMP6 and VELA satellites along the flanks of the magnetosphere is formed by magnetosheath plasma which has diffused into the magnetosphere and which is streaming parallel to the magnetopause across closed magnetospheric field lines.

The model of Eastman et al. (1976) is based on laboratory studies illustrated in fig. 1 and reported by Baker and Hammel (1965). Indeed it has been shown experimentally that a plasma stream directed into a strong magnetic field region can easily move across the magnetic field lines, at least when the walls of the vacuum chamber are made of insulating material; in other words, when Σ_p, the transverse conductivity integrated along the magnetic field lines (Pedersen conductivity), has a sufficiently low value. On the contrary, when the walls are good conductors of electricity, Baker and Hammel (1965) show that the plasma stream does not penetrate significantly across the transverse magnetic field, but is deflected toward the $-\vec{v} \times \vec{B}$ direction, where $\vec{v}$ is the initial stream velocity and $\vec{B}$ the magnetic field intensity. This extreme case, where $\Sigma_p \cong \infty$, is abusively called the frozen-field approximation (or the ideal MHD-approximation). When Σ_p is large, the polarization charges that induce electric fields ($\vec{E} = -\vec{v} \times \vec{B}$) at the location of the plasma stream, are rapidly neutralized by field-aligned currents and by the shorting effect of the walls. The electric polarization charges are carried continuously towards the surface of the plasma element by polarization drifts in opposite directions for the electrons and ions. Note that the resulting polarization current ($\vec{J}_p$) flows in a direction opposite to the locally induced and time dependent electric field ($\vec{E}$). As a consequence $\vec{J}_p.\vec{E}$ is a negative quantity as it is the case for MHD generators (Heikkila, 1978).

When the Pedersen conductivity, however, is reduced to sufficiently low values (as in the ionosphere of the Earth), the plasma stream can penetrate a significant distance into the magnetic field region. Momentum is transfered to the walls and kinetic energy is dissipated by Joule heating in the resistive part of the circuit where field-aligned currents are closed by transverse currents.

Eastman et al. (1976) considered that the magnetosheath plasma is a similar stream of plasma moving across the geomagnetic field. The polarization electric field is perpendicular to the magnetopause. The field-aligned currents flow up and down in the high latitude ionosphere which is a load for the magnetospheric current system depicted in Fig. 3 of Eastman et al. (1976).

The initial penetration of plasma into the geomagnetic field to produce a relatively thick boundary layer is supposed to proceed by diffusive processes (e.g. Eviatar and Wolf, 1968). Note that the Boundary Layer model of Eastman et al. (1976), as well as related approaches by Coleman (1970) or Cole (1974) are steady state models. Since it implies Diffusive Penetration of solar wind particles across the magnetopause, we will call it "DP model" for future reference.

Impulsive penetration model

At the symposium on the "Magnetopause Regions" (Amsterdam, September 1976), Lemaire and Roth proposed a non-steady state model to describe

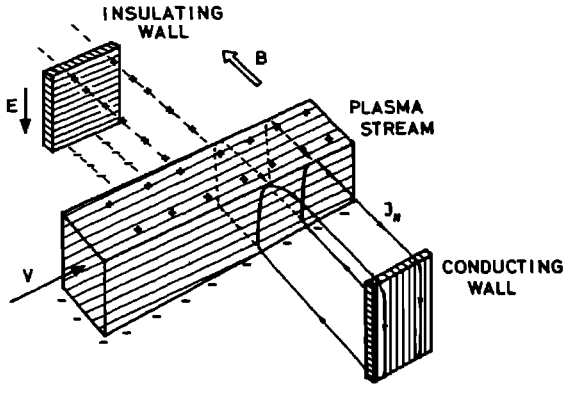

Fig. 1. Simplified model of a collisionless plasma crossing a transverse magnetic field showing (a) the charging up effect of an insulating wall and (b) the depolarizing effect of a conducting wall.

the interaction between the solar wind and the geomagnetic field. They have suggested that the solar wind is formed of small scale filaments or irregularities which are thrown into the magnetosphere because of their excess of momentum density.

The Impulsive Penetration (IP) model of Lemaire and Roth (1978) is also based on the physical principles illustrated in fig. 1. The main difference between this IP-model and the DP-model is that the latter could be active even in a steady state situation, while the former requires plasma inhomogeneities in the solar wind.

Figure 2 illustrates the penetration mechanism according to the IP model. A filamentary solar wind structure (whose equatorial cross section is represented by the hatched areas) is convected across the Bow Shock and across the Magnetopause because of its excess of momentum. The IMF is supposed to be southward to favor penetration in the magnetosphere (see Lemaire et al., 1978). The diamagnetic currents ($\vec{J}_d$) circling around the surface to maintain the total pressure balance, combine with the oppositely directed Chapman-Ferraro currents ($\vec{J}_{CF}$) to weaken the $\vec{J} \times \vec{B}$ force at the location where the filament impacts on the magnetopause. As a consequence, the plasma element is expanded and accelerated toward the inside of the magnetosphere.

Once engulfed in the region of closed magnetospheric field lines, the magnetosheath-like plasma element is slowed down by transferring its excess of momentum to the ionospheric plasma in the throat region; the excess of kinetic energy is dissipated by Joule heating in the dayside cusp ionosphere where Titheridge (1976) has found a large and well defined peak in ionospheric temperatures at 1000 km and 400 km altitude (Lemaire and Roth, 1978).

The plasma elements with the largest total momentum will be stopped deeper into the geomagnetic field than those with a smaller total momentum. The larger the total momentum the deeper the intruding plasma irregularity can penetrate into the magnetosphere before it is slowed down as described by Lemaire (1977), Lemaire and Roth (1978), Lemaire et al. (1978).

For instance a solar wind irregularity of 10000 km diameter with an original momentum excess of 5% penetrates through the magnetopause with an excess bulk flow velocity $V = 20$ km s^{-1}. If it carries a magnetic induction B_i of 30 nT the induced convection electric field $\underset{\sim}{E} = - \underset{\sim}{V} \times \underset{\sim}{B}_i = 0.6$ mV/m. If its density is 5 cm^{-3}, half of its kinetic energy will be dissipated in the ionosphere ($\Sigma_p = 0.2$ Siemens) before it has penetrated a distance of 2 Earth radii into the magnetosphere.

A plasma irregularity with a momentum density smaller than the average would have a smaller velocity than the magnetosheath plasma when it has traversed the Bow Shock. Therefore this plasma hole will not be able to reach the average magnetopause surface ; it will be convected around the magnetosphere at larger radial distances (i.e. in the middle of the magnetosheath layer). A sudden reduction of the average momentum density in the solar wind leads therefore to the formation of a new magnetopause at larger average radial distances from the Earth.

The dayside Boundary Layer is then considered as the stopper region of solar wind plasma irregularities of all sizes and of all momentum densities exceeding the average solar wind value.

Discussion

Laboratory experiments by Bostik (1956) and Baker and Hammel (1965) support the idea that magnetized and non-magnetized plasma elements can actually move across large transverse magnetic fields when the conductivity is not too large somewhere along the magnetic field lines (see fig. 1). Theoretical studies by Dolique (1963) and Schmidt (1960, 1966) have confirmed this idea on which both the DP model and the Impulsive Penetration model are based.

Let us now compare the results predicted by both models with the observations reported above and made in the Boundary Layer of the dayside Magnetosphere.

1) Both models account for the presence of magnetosheath-like plasma earthward of the magnetopause.

In the DP model an unspecified diffusion process is responsible for continuous particle penetration, while in the IP model the magnetosheath plasma penetrates impulsively into the magnetosphere wherever and whenever the solar wind carries irregularities with a sufficient excess of momentum density.

The steady state DP model should work at any time even when there are no irregularities in the solar wind. Sometimes the Boundary Layer is not observed adjacent to the magnetopause or is so thin that it might have escaped detection. This raises the question of why the diffusion process in the DP model is inactive on some occasions ?

The absence of a well resolved PBL or the observation of a PBL detached from the magnetopause layer is easier to justify in the IP model by the occasional absence of small scale irregularities in the solar wind during some period of time preceeding the observation.

2) In the DP model as well as in the IP model, the PBL can be located in a region of generally closed geomagnetic field lines. However, for the DP model the magnetopause is a smooth surface permeable to particle diffusion. In the IP model the magnetopause is assumed to be an almost

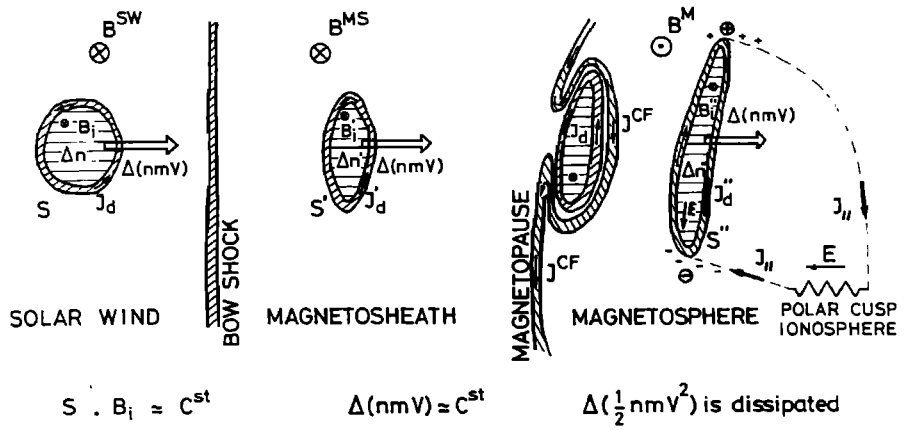

Fig. 2. Sequence of events representing the positions of a solar wind plasma irregularity penetrating through the Bow Shock and Magnetopause. S, S', S" are the successive cross sections of the intruding filament. $\vec{B}_i$, $\vec{B}_i'$, $\vec{B}_i''$ the magnetic inductions inside the element. $\vec{J}_d$, $\vec{J}_d'$, $\vec{J}_d''$ the sums of magnetisation, grad-B and curvature currents. J_{CF} is the Chapman-Ferraro current density. $\vec{B}^{SW}$, $\vec{B}^{MS}$, $\vec{B}^{M}$ are the magnetic field intensities in the solar wind, magnetosheath and magnetosphere respectively; $\vec{E}$ is the polarisation electric field ($-\vec{V} \times \vec{B}_i$) induced in the magnetosphere by the plasma element moving with the velocity $\vec{V}$. As soon as the plasma element is engulfed in a region with finite integrated Pedersen conductivity, the excess kinetic energy of the intruding irregularity can be dissipated by Joule heating ; the excess of momentum is transfered to the ionospheric plasma in the throat region.

closed and bumpy surface with localized regions where plasma filaments hang out of the magnetosphere. In these regions magnetic flux interconnection occurs between the IMF and the geomagnetic field.
3) The plasma density decreases progressively with depth in both models. For the DP model this is a straightforward consequence of the particle diffusion mechanism. In the IP model it is due to the spreading of the plasma elements as they penetrate deeper into the magnetosphere. Indeed, when a filament is engulfed in the geomagnetic field, the magnetic field lines can cross the volume where the magnetosheath-like plasma is confined as illustrated in fig. 3 (Lemaire, 1977).

Charge separation electric fields prevent the electrons from escaping faster than the slower ions (Kan, 1975, Swift, 1975; Lemaire and Scherer, 1978). These charge separation electric fields have a parallel (field aligned) component which maintains the local and global neutrality of the plasma. Nevertheless, this $E_{\parallel}$-field cannot prevent the expansion of the plasma volume in directions parallel to the magnetic field. Such an expansion drives the motion of the edges of the confined plasma element towards the low altitude cusp regions where Carlson and Tobert (1977) have detected impulsive magnetosheath-like plasma precipitation. It is clear that the number density of the engulfed magnetosheath-like plasma decreases with time as a consequence of its field-aligned expansion.

Plasma filaments observed near the inner side of the magnetospheric

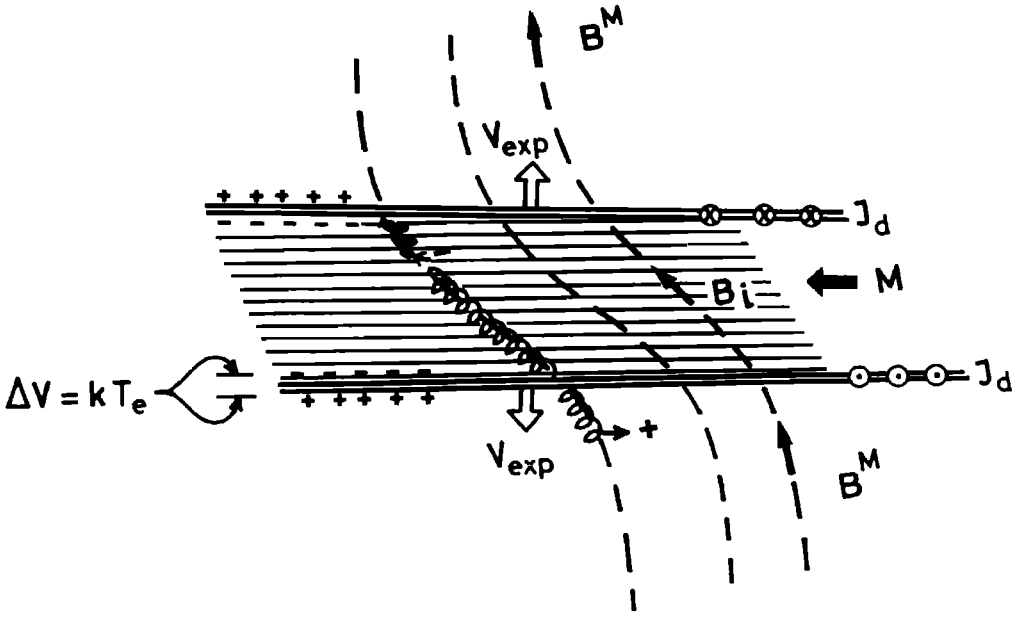

Fig. 3. Cylindrical plasma element engulfed in an external magnetic field ($\vec{B}^M$). The magnetisation ($\vec{M}$) produced by the surface currents ($\vec{J}_d$) is not parallel nor antiparallel to $\vec{B}^M$. The magnetic field induction ($\vec{B}_i$) inside the filament is not aligned with $\vec{B}^M$. The magnetic field lines (dashed lines) traverse the boundaries of the plasma element. The electrons are prevented to escape across this boundary by electrostatic potential barriers which preserve the global quasi-neutrality in the magnetosheath-like plasma element. The 100 eV - 10 keV ions can easily traverse this potential barriers and are precipitated into the polar cusp ionosphere where they have been observed with an energy dependent time dispersion by Carlson and Torbert (1978). The plasma pressure drives expansion of the volume element in directions parallel to the magnetic field lines. It is only when the plasma front surfaces have reached the low altitude cleft region that the precipitated magnetosheath electrons (confined behind the potential barrier) can be detected.

Boundary Layer are in a more advanced expansion phase than those which are closer to the magnetopause since the latter entered more recently. We think that this explains why the density in the Boundary Layer gradually decreases with depth.

There are cases that show density plateaus (usually in the subsolar region) where the density changes by steps in the Boundary Layer (Haerendel et al., 1978). The IP model can account for such observations as evidence for penetration of an extended irregularity (10000 km or more in diameter) behind the magnetopause. One can also view this as the formation of a new magnetopause at a larger average radial distance as described above.

4) The progressive increase of the average ion energy with depth (as observed in the LLBL) is associated with the decrease in the number

density of magnetosheath-like particle discussed above. Indeed when the density of the cold magnetosheath-like ions decreases compared to the hot magnetospheric particles, the average ion temperature necessarily increases. Note that magnetospheric ions can easily diffuse into and out of the engulfed filaments along interconnected magnetic field lines (see fig. 3) since their energy is much larger than the electrostatic potential (50 - 100 Volts) existing at the surface to keep the magnetosheath-like plasma globaly neutral. This explains why both magnetospheric and magnetosheath ions are detected at the same time and at the same places throughout the PBL.

5) Magnetosheath-like electrons are confined within the engulfed plasma element by the electrostatic potential barriers of 50 - 100 Volts, mentioned above. Therefore, the energy spectrum of the confined electrons remains virtually indistinguishable to the spectrum of the adjacent magnetosheath electrons.

To explain the electron energy spectra observed in the PBL with the DP model, the infered diffusion mechanism must scatter equally well electrons of any energy and of any pitch angle. Furthermore, the diffusion coefficient for all these electrons should be almost equal to the diffusion coefficient for the solar wind ions, indeed the electron Boundary Layer has nearly the same thickness as the ion Boundary Layer.

6) The observations of the plasma flow velocity in the Boundary Layer are also consistent with the theory of impulsive penetration. The bulk flow of an intruding filament can have components both perpendicular and parallel to the geomagnetic field direction. In the IP model the velocity vector is directed away from the subsolar point in agreement with the observations in the Low Latitude Boundary Layer. Note that the observed plasma bulk flow velocity is not necessarily parallel to the magnetopause as expected from the steady state DP model.

As a consequence of the field-aligned expansion mentioned above, the plasma flow velocity in the Boundary Layer can assume large values parallel and antiparallel to the local magnetic field direction.

7) As a consequence of the electrodynamic coupling between the intruding plasma elements and the polar cusp ionosphere, the excess of momentum carried by the plasma elements is transfered impulsively to the ionospheric plasma in the throat region. Repetitive action of this impulsive momentum transfer can push ionospheric plasma across the polar cap and permanently drive the well known two-cell convective flow pattern at high latitudes.

As a result of this momentum transfer, the cross-B velocity of the intruding plasma elements decreases with depth earthward of the magnetopause, in accordance with the Boundary Layer observations. The larger the integrated Pedersen conductivity, the faster the bulk flow velocity will decrease. When the transverse conductivity is infinite somewhere along the interconnected magnetic field lines, the plasma bulk flow speed decreases abruptly at the magnetopause (see, Willis, 1978).

Diffusion processes invoked in the DP model can also account for velocity shears in the Boundary Layer. In both models the predicted differential velocity structure is similar to that envisaged by Axford and Hines (1961) for a viscous-like interaction.

8) The magnetic induction ($\vec{B}$) measured inside the high β-plasma region can be quite different in intensity and direction from the external

geomagnetic field ($\vec{B}^M$) (see Lemaire, 1977). This feature is illustrated in fig. 3 where we have shown the distribution of magnetic field lines produced by a cylindrical current system whose axis of symmetry is tilted by a large angle with respect to the external magnetic field direction ($\vec{B}^M$). The diamagnetic field perturbation produced is usually large when the kinetic pressure (nkT) of the plasma is of the same order of magnitude as $B^2/2\mu_o$, the magnetic field pressure (i.e. when $\beta \gtrsim 1$). Since the plasma density and pressure decrease as a consequence of the field-aligned expansion, β decreases and the pressure gradients driving the magnetisation currents smooth out gradually. The result is that the diamagnetic field perturbations produced by these surface currents also die out as a function of penetration depth. This corresponds to what is observed at the inner portions of the Boundary Layer where the standard deviation of low frequency magnetic fluctuations generally decay with distance from the magnetopause.

In the DP model irregular magnetic field variations should not be present or they must be interpreted as consequences of motions of the magnetopause current system. Forward and backward wavy motions of the average magnetopause as originally assumed, require large plasma bulk flow velocity components normal to the magnetopause, as well as quite large accelerations of the adjacent magnetosheath and magnetospheric plasmas. Even the recent ISEE observations probably can be interpreted in the frameworks of both alternatives.

9) The thickness of the Boundary Layer is not estimated in the DP model. In the IP model the frontside magnetospheric Boundary Layer is considered as the stopper region of all solar wind irregularities with excesses of momentum (Lemaire, 1977) and with appropriate magnetisation directions (Lemaire et al. 1978). For an excess density (and momentum density) of only 5%, a plasma irregularity of 10000 km diameter, breaking through the magnetopause with an initial speed of 20 km/sec will be stopped in about 30 minutes if the integrated Pedersen conductivity is 0.2 Siemens. During this slowing down period, the plasma center of mass has penetrated nearly 2 Earth Radii behind the average magnetopause (Lemaire, 1977). Smaller irregularities with smaller excesses of momentum are stopped in a shorter distance i.e. closer to the average position of the magnetopause. It appears therefore that the thickness of the dayside Boundary Layer is expected to be highly variable and will mainly depend on the spectral distribution of the momentum density irregularities in the solar wind.

According to Lemaire et al. (1978) the orientation of the IMF also controls access of solar wind irregularities to the interior of the magnetosphere. For instance when B_z has a large southward component, penetration is greatly favored in the vicinity of the subsolar point. Furthermore, when By is positive (away IMF polarity) the post-noon quadrant of the northern hemisphere is favored as well as the pre-noon sector of the southern hemisphere. On the contrary when By $<$ o (toward IMF polarity) the reverse is true : i.e. penetration is easier in the northern pre-noon and southern post-noon quadrants.

The lack of correlation between the IMF direction and the average thickness of the Boundary Layer may be due to the averaging over all quadrants and should be reexamined in the light of these conclusions. The presence of a Boundary Layer at certain latitudes and local times should in principle depend on the IMF direction. But the thickness is

mainly dependent on the irregularity spectrum in the solar wind at any instant of time.
10) In the impulsive penetration model significant density enhancements are expected when a large scale filament has recently been injected into the Boundary Layer. It is more difficult to explain partly detached magnetosheath-like plasma-regions in the frame work of the steady-state DP model.

Conclusions

From the preceeding discussion it can be seen that both the DP-model and the IP-model for the Boundary Layer formation can account for a number of the observations. However, there are some features that only a non-steady state model (e.g. the Impulsive Penetration model) can explain satisfactorily.

It is probably not yet possible to determine definitively the relative importance of both mechanisms in transfering particles, momentum and energy from the solar wind to the magnetosphere. The relative importance of steady state or non-steady state merging processes is even more difficult to answer, since reliable description and definitions of these processes are still under debate.

Acknowledgments. The author thanks Drs. J. Eastman, E. Wipple, and M. Roth for helpful comments and suggestions.

References

Akasofu, S.-I., E.W. Hones, Jr., S.J. Bame, J.R. Asbridge, and A.T.Y. Lui, Magnetotail and boundary layer plasmas at a geocentric distance of ~18 R_E : Vela 5 and 6 observations, J. Geophys. Res., 78, 7257-7274, 1973.

Axford, W.I., and C.O. Hines, A unifying theory of high-latitude geophysical phenomena and geomagnetic storms, Canad. J. Phys., 39, 1433-1464, 1961.

Baker, D.A., and J.E. Hammel, Experimental studies of the penetration of a plasma stream into a transverse magnetic field, Phys. Fluids, 8, 713-722, 1965.

Bostick, W.H., Experimental study of ionized matter projected across a magnetic field, Phys. Rev., 104, 292-299, 1956.

Carlson, C.W., and R.B. Torbert, Solar wind ion injections in the morning auroral oval, (preprint 1977).

Coleman, P., Jr., Tangential drag on the geomagnetic cavity, Cosmic Electrodyn., 1, 145-159, 1970.

Coles, K., Outline of a theory of solar wind interaction with the magnetosphere, Planet. Space Sci., 22, 1075-1088, 1974.

Crooker, N.U., Explorer 33 entry layer observations, J. Geophys. Res., 82, 515-522, 1977.

Crooker, N.U., The magnetospheric boundary layers : a geometrically explicit model, J. Geophys. Res., 82, 3629-3633, 1977.

Dolique, J.-M., Pénétration d'un faisceau neutralisé ions-électrons dans une barrière magnétique. Conditions portant sur la hauteur de la barrière, Compt. Rend. Acad. Sci. Paris, 256, 3984-3987, 1963.

Dolique, J.-M., Pénétration d'un faisceau neutralisé ions-électrons dans

une barrière magnétique. Condition portant sur le gradient du champ magnétique, Compt. Rend. Acad. Sci. Paris, 256, 4170-4172, 1963.

Eastman, T.E., E.W. Hones,Jr., S.J. Bame, and J.R. Asbridge, The magnetospheric boundary layer : site of plasma, momentum and energy transfer from the magnetosheath into the magnetosphere, Geophys. Res. Letters, 3, 685-688, 1976.

Eastman, T.E. and E.W. Hones, Jr., Characteristics of the magnetospheric boundary layer and magnetopause layer as observed by IMP 6, submitted to J. Geophys. Res., 1978.

Eviatar, A., and R.A. Wolf, Transfer processes in the magnetopause, J. Geophys. Res., 73, 5561-5576, 1968.

Freeman, J.W., Jr., C.S. Warren, and J.J. Maguire, Plasma flow directions at the magnetopause on January 13 and 14, 1967, J. Geophys. Res., 73, 5719-5731, 1968.

Haerendel, G., G. Paschmann,N. Sckopke, H. Rosenbauer, and P.C. Hedgecock, The frontside boundary layer of the magnetosphere and the problem of reconnection, J. Geophys. Res., 83, 3195-3216, 1978.

Heikkila, W.J., Energy budget for the magnetosphere, (paper presented at AGU Conference on "Quantitative modelling of magnetospheric processes", La Jolla), 1978.

Kan, J.R., Energization of auroral electrons by electrostatic shock waves, J. Geophys. Res., 80, 2089-2095, 1975.

Lemaire, J., Impulsive penetration of filamentary plasma elements into the magnetospheres of the Earth and Jupiter, Planet. Space Sc., 25, 887-890, 1977

Lemaire, J., and M. Roth, Penetration of solar wind plasma elements into the magnetosphere, J. Atmos. Terr. Phys., 40, 331-335, 1978.

Lemaire, J., M.J. Rycroft, and M. Roth, Control of impulsive penetration of solar wind irregularities into the magnetosphere by the interplanetary magnetic field direction (to be published in Planet. Sp. Sci.), Aeronomica Acta A n° 193, 1978.

Lemaire, J., and M. Scherer, Field aligned distribution of plasma mantle and ionospheric plasmas, J. Atmos. Terr. Phys., 40, 337-342, 1978.

Paschmann, G., G. Haerendel, N. Sckopke, H. Rosenbauer, and P.C. Hedgecock, Plasma and magnetic field characteristics of the distant polar cusp near local noon : The entry layer, J. Geophys. Res., 81, 2883-2899, 1976.

Paschmann, G., N. Schopke, G. Haerendel, J. Papamastorakis, S.J. Bame, J.R. Asbridge, J.T. Gosling, E.W. Hones, Jr., and E.R. Tech, ISEE plasma observations near te subsolar magnetopause ; submitted to Space Science Reviews, 1979.

Rosenbauer, H., H. Grünwaldt, M.D. Montgomery, G. Paschmann, and N. Sckopke, HEOS 2 plasma observations in the distant polar magnetosphere : the plasma mantle, J. Geophys. Res., 80, 2723-2737, 1975.

Schmidt, G., Plasma motion across magnetic fields, Phys. Fluids, 3, 961-965, 1960.

Schmidt, G., Physics of High Temperature Plasmas, Academic Press, New York and London, 1966.

Swift, D.W., On the formation of auroral arcs and acceleration of auroral electrons, J. Geophys. Res., 80, 2096-2108, 1975.

Titheridge, J.E., Ionospheric heating beneath the magnetospheric cleft, J. Geophys. Res., 81, 3221-3226, 1976.